India Williams - FW: Pier Renovation Estimate

From: "William Ballard" <wballard12@verizon.net>
To: <pclark@tampabaywatch.org>, "'Mayor'" <Mayor@stpete.org>
Date: 7/10/2014 6:47 PM
Subject: FW: Pier Renovation Estimate
CC: <India.Williams@stpete.org>
Attachments: Pier Renov Attachment 3.pdf; PIER LAYOUT Sheet 2 (1).pdf

Mr. Clark – I serve on the Pier Cultural Resource Committee which had its first meeting July 2nd. At that meeting Thomas Gibson, P.E., Engineering Director of the City's Engineering and Capital Improvements Department, presented the attached PIER LAYOUT Sheet 2. Pursuant to my request he has also provided me with Pier Renov Attachment 3, a document with a detailed budget for a renovation project in which all of the 1926 approach bridge and pier head structures are removed and replaced with a higher, FEMA compliant approach bridge one half the width of the existing bridge and a pier head one third the area of the existing pier head. The third major element in this cost exercise is renovation of the Inverted Pyramid to provide it a new useful life and make it code compliant. The 37,000 SF of existing deck level retail shell space is to be demolished and not replaced. The estimated cost of this hypothetical pier replacement and renovation project equals $46 million, a sum which, I believe, approximates the balance of the pier project budget. In looking at the cost estimate, take note of the numerous items that are noted but not included in the project cost, i.e. fishing platforms.

I had previously researched bridge cost estimates as published by the Florida Department of Transportation before writing my letters to you of June 9 and June 22, 2014. I discussed Mr. Gibson's estimated bridge and pier head cost per SF with him today. I believe his cost estimate to be a professional and well informed estimate. I have no basis to objectively comment on his cost for renovation of the Inverted Pyramid, but it appears inescapable that there are some hard choices to be made and the first is that posed by my letter of June 9th: pier length versus those other program elements that the Pier Advisory Task Force suggested in its Final Report of June, 2010. The only one of the three alternative conceptual plans offered by the task force that was buildable within budget proposed a pier of less than one half the length of the Municipal Pier.

To reiterate part of what is in my June 22nd letter, many of the items that have made your preliminary program list are better dealt with in the Downtown Waterfront Master Plan because they are tied into downtown transportation planning, or, like courtesy docks and watercraft rental, more safely and more economically accomplished with facilities in our marina and park systems. In view of your group's limited time to state a program that a design team can effectively respond too, I urge you to drop from your proposed program statement any item that sounds fun and nice but has not been clearly defined as to function and scope. "Water Taxi" is an example. Are the proponents of "Water Taxi expecting the design teams to conjure up an economically viable water taxi service and design all the shore side facilities and transportation connections a water taxi service would require, most of which would be outside the pier area?

Last night the City's architect asked the Working Group to quantify those elements that were quantifiable. This is reasonable and usual. The Pier Advisory Task Force concluded that every successful recreational pier had a primary draw, and that in the case of our new pier, that primary draw would be a restaurant based program. Two that end, the Task Force recommended 36,000 SF of structure to accommodate 26,000 SF of restaurant space. The contest winning design, which City Council accepted, included no restaurant space, and that was a

major factor leading to the public rejection of the project. Shell space for a restaurant or multi-restaurant facility will cost many millions. This pier length/program/budget conundrum probably will have to be answered by someone up the line from the Working Group. You have an outstanding group, but I have copied the Mayor.

Please resist the temptation to shoot the messenger.

Bill Ballard

727-827-5021

From: Thomas Gibson [Thomas.Gibson@stpete.org]
Sent: Thursday, July 10, 2014 2:57 PM
To: wballard12@verizon.net
Cc: Chris Ballestra; Michael Connors; Raul Quintana
Subject: Pier Renovation Estimate

Mr. Ballard,
In response to your request today, attached below is our square foot estimate, and layout drawing to renovate the inverted pyramid building, and replace the approach bridge and pier head at reduced size, within the $46 million budget. This square foot costs are based on available data provided or reviewed by our A/E consultants.

The first section lists the existing pier quantities for the inverted pyramid and approach bridge and pier head. The following section contains the Building Renovation construction estimate, followed by the Pier Bridge construction estimate, followed by Demolition cost, and the last section contains Design and Administration costs, including Architect/Engineer fees and consultant costs, permits, public art allowance, tenant fit out allowance, and a project contingency amount to account for unforeseen costs. The line items with NIC in the middle are not included. Please advise if additional information is required.
Best regards,

Thomas B.Gibson , P.E.
Engineering Director
City of St. Petersburg
Engineering & Capital Improvements Department
727-893-7295

Attachment 3

Original Inverted Pyramid Quantities	Area	Old	Pier	Length	Width	Area SF
First Floor	3,882.00	Landside		360	100	36,000.00
Second Floor	3,882.00	Bridge over water		1020	100	102,000.00
Third Floor	9,900.00	Pier Head over wa		422	300	126,600.00
Fourth Floor	14,400.00	Cassion	5 ea	20	20	2,000.00
Fifth Floor (A/C Only)	4,722.00	Pyramid dripline		150	150	22,500.00
Sixth Floor - Mechanical	3,882.00		Length and width from PB 2003 report			
Total Building Area	40,668.00					
Fifth Floor Roof deck	17,778.00					
Total Area W/ Roof	58,446.00					
Total Area A/C Area (without Sixth Floor)	36,786.00					

Building Renovation Construction Cost	Area	Unit	Qty.	Total Area	Cost/unit	Total Cost
Selective Demo (floors 1 - 5)	36,786.00	SF	1	36,786.00	$ 5.00	$ 183,930
Hazardous Material abatement	1.00	LS	1	50,000.00	$ 1.00	$ 50,000
New Ground Floor Utility Rooms and Restrooms	3,500.00	SF	1	3,500.00	$ 225.00	$ 787,500
Raise Headers Elevators, stairwells, utility Rms	12.00	Ea		12.00	$ 20,000.00	$ 240,000
Reinforce Structure for Current Wind Load Code		LS		NIC	$ -	$ -
Ground Floor Street Furniture & Accessories	1.00	LS	1	50,000.00	$ 1.00	$ 50,000
Remove roof deck	17,778.00	SF	1	17,778.00	$ 4.50	$ 80,001
Reroof & replace deck	17,778.00	SF	1	17,778.00	$ 20.00	$ 355,560
Replacement Railings to Code	600.00	LF	1	600.00	$ 150.00	$ 90,000
Flooring, Partitions & Ceilings finishes	36,786.00	SF	1	36,786.00	$ 18.00	$ 662,148
Doors, Hardware	36,786.00	SF	1	36,786.00	$ 5.00	$ 183,930
Exterior Waterproofing, Sealing & Paint	40,668.00	SF	1	40,668.00	$ 5.00	$ 203,340
Floor to ceiling Windows (14' x 9'-6") - 14 per side	133.00	SF	56	7,448.00	$ 100.00	$ 744,800
Exterior Storefront	250.00	SF	4	1,000.00	$ 100.00	$ 100,000
Kitchen	1.00	LS	1	250,000.00	$ 1.00	$ 250,000
Retail Space				NIC		
Emergency generator	1.00	LS		168,267.00	$ 1.00	$ 168,267
Plumbing	36,786.00	SF	1	36,786.00	$ 10.80	$ 397,289
Elevators	6.00	Ea		6.00	$ 149,760.00	$ 898,560
Electrical & Communication & Security Systems	36,786.00	SF	1	36,786.00	$ 27.10	$ 996,901
HVAC Repalcement 200 tons	36,786.00	SF	1	36,786.00	$ 45.00	$ 1,655,370
Fire Protection	36,786.00	SF	1	36,786.00	$ 6.18	$ 227,337
Sub -Total MEP						$ 4,343,724
Sub-Total Building						$ 8,324,933
General Conditions @ 10%						$ 832,493
Contractor OH&P @ 5%						$ 457,871
P &P Bond 1.5% % Over water Insurance 3%						$ 432,688
Contingency @ 15%						$ 1,442,295
Subtotal						$ 11,490,280
Cost Escalation to Mid point of const 2.5 yrs @ 2% =5%						$ 574,514
Total Inverted Pyramid Renovation (w/o Floor deck)						**$ 12,064,795**
Pier Bridge Construction Cost						
Pier Head (200 x 200') less 22,500 SF under Pyramid	19,450.00	SF			$ 131.00	$ 2,547,950
Reconstruct Inverted Pyramid First Floor	20,500.00	SF			$ 150.00	$ 3,075,000
Raise Pier Head 6 ft added pile length (110 piles x 6')	660.00	LF			$ 112.00	$ 73,920
Extend Cassion Life - Coating,Cathodic protect H piles	5.00	EA			$ 300,000.00	$ 1,500,000
Pier Bridge Over Water ((1,020' + 100')x 50')	56,000.00	SF			$ 125.00	$ 7,000,000
Raise Pier Bridge 6 Ft added pile length (100 piles x 6 ')	600.00	LF			$ 112.00	$ 67,200
Landside Pier Bridge Approach (360'x50')	18,000.00	SF			$ 105.00	$ 1,890,000
Concrete Boat landing Docks -east and south(200'x20')	4,000.00	SF		NIC	$ -	$ -
Wooden Fishing Pier -East Pier Head	150.00	LF		NIC	$ -	$ -
Sidewalks/curb	63,900.00	SF			$ 8.00	$ 511,200
Brick Paver sidewalks	-	SF		NIC	$ -	$ -
Shade Structures along Approach	24.00	EA		NIC	$ -	$ -
Planters and Benches	-	EA		NIC	$ -	$ -
Median separator curb 1140' x 2ea x 4' wide	-	SF		NIC	$ -	$ -
Historic approach Bridge Balconies 22 ea x 20'x5'	2,200.00	SF		NIC	$ -	$ -
Concrete Railing	3,710.00	LF			$ 100.00	$ 371,000
Bait Houses - reuse 2 each existing	2.00	EA		NIC	$ -	$ -
Utility -Potable Water	1,600.00	LF			$ 105.00	$ 168,000
Utility -Fire Protection water	1,600.00	LF			$ 105.00	$ 168,000
Utility-Sewer	1,600.00	LF			$ 105.00	$ 168,000
Utility -gas	1,600.00	LF		NIC	$ -	
Utility - electric	1,600.00	LF			$ 184.00	$ 294,400
Sewer Lift Station No 8	1.00	ea			$ 450,000.00	$ 450,000
Lighting $20/LF wire / conduit + $3500 fixture @ 50'	3,700.00	LF			$ 90.00	$ 333,000
Landside Trolley station 120' long x 60' wide	7,200.00	SF		NIC	$ -	$ -
Landscaping and irrigation		LS		NIC	$ 96.00	$ -
Stormwater piping/treatment		LS		NIC	$ -	$ -
Total Pier Bridge, approach, boat docks, utilities	120,150.00	SF			$ 154.95	$ 18,617,670
General Conditions @ 10%	In above					$ -
Contractor OH&P @ 5%	in above					$ -
P &P Bond 1.5% and Overwater Insurance 3%	in above					
Contingency @ 15%						$ 2,792,651
Subtotal						$ 21,410,321
Cost Escalation to Mid point of construction (5%)						$ 1,070,516
Total Pier Bridge and Head, landside and over water						**$ 22,480,837**
Combined revised total - New Construction						**$ 34,545,631**
Demolition of Existing Pier Bridge						
Demo existing Pier Head & Bridge and extract piles	1.00	ea	1	1	$ 3,350,822	$ 3,350,822
Navigation Aids -5 Lighted beacon on Invert Pyramid	5.00	ea	1500		$ 7,500.00	$ 7,500
						$ 3,358,322
Design and project Administration Cost						
Design A/E Fees -does not include demo	10.0%					$ 3,454,563
Construction Admin, Testing, Inspection	2.0%					$ 690,913
Project Management	1.0%					$ 345,456
Geotechnical Engineering, Other Consulting	1.00	ea	1	1	$ 500,000	$ 500,000
Tenant Fitout	1.00	ea	1	1	$ 750,000	$ 750,000
Permit Fees 1%	1.0%	ea				$ 345,456
Art in Public places -cap amount	1.00	ea	1	1	$ 500,000	$ 500,000
Contingency for Design and Admin	10.0%					$ 287,047
Subtotal Soft Cost						**$ 6,873,435**
Project contingency						**$ 1,500,000**
Total Project Cost - Reduced size pier						**$ 46,277,388**
Nov 6 ,2013 4R						

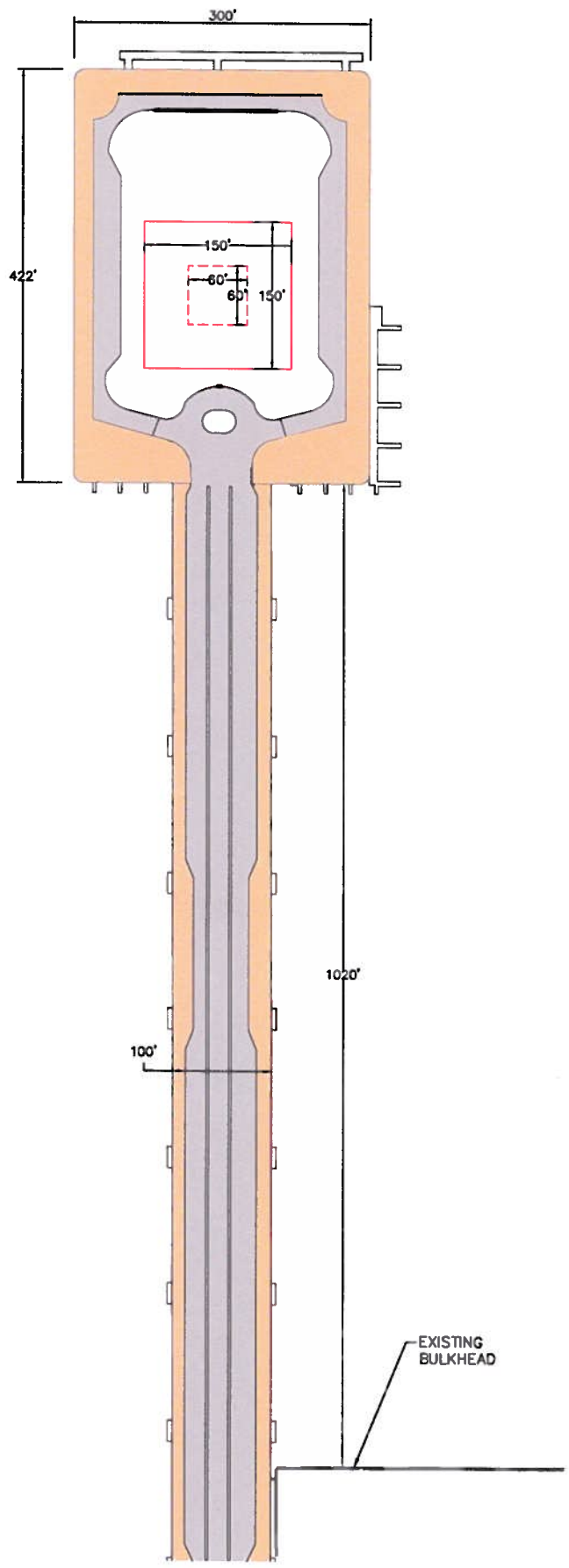

EXISTING PIER
LAYOUT

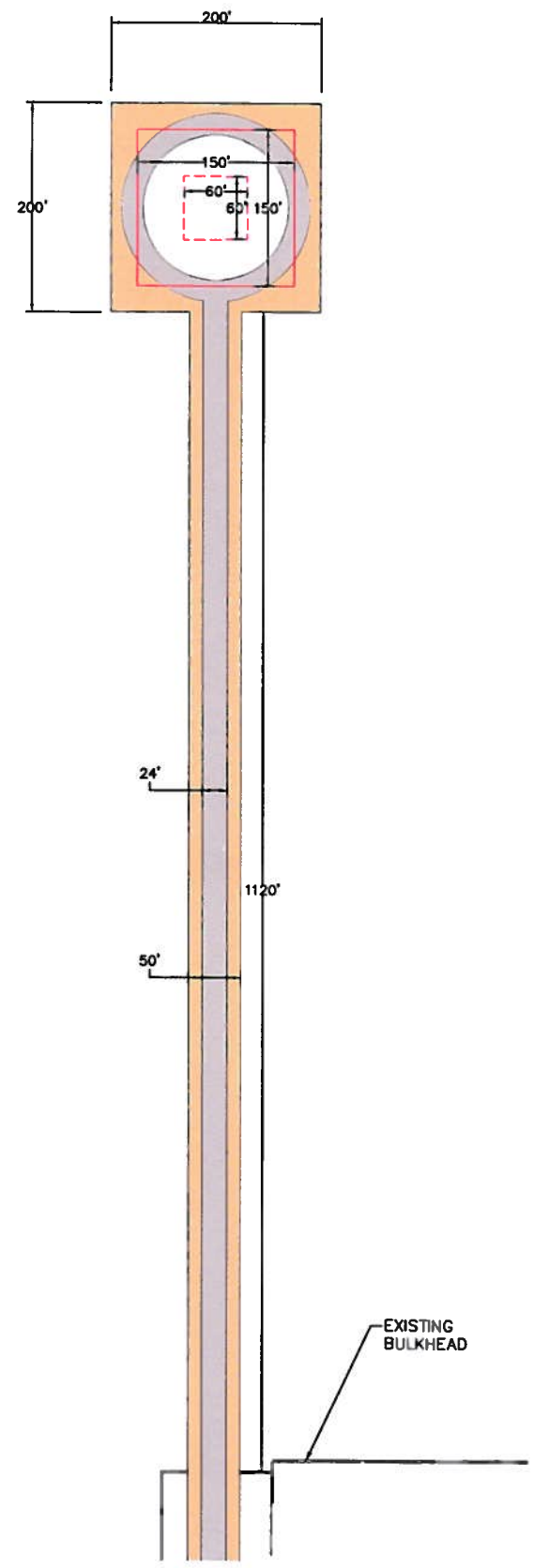

REDUCED PIER
LAYOUT

LEGEND

ASPHALT DRIVE

WALKWAY

PIER BUILDING